808 PCS 6+ M38 - B0302

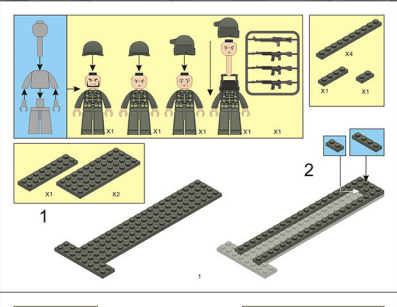

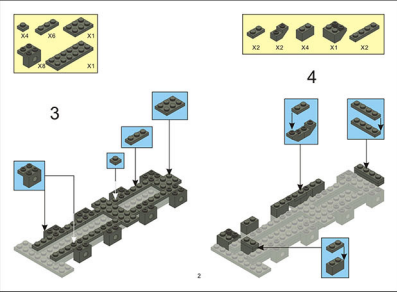

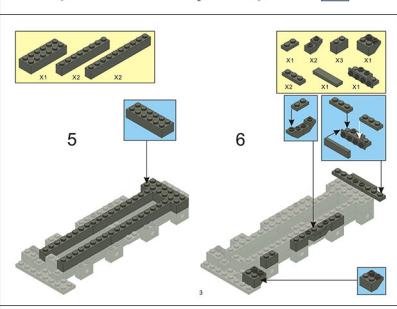

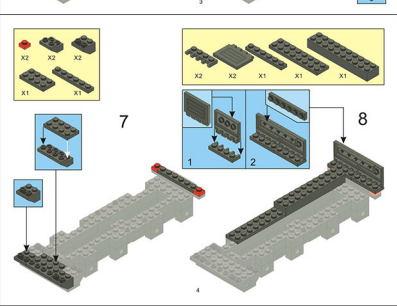

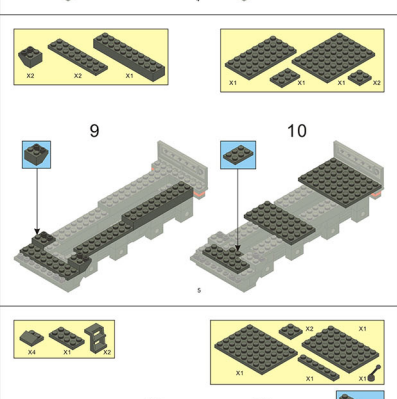

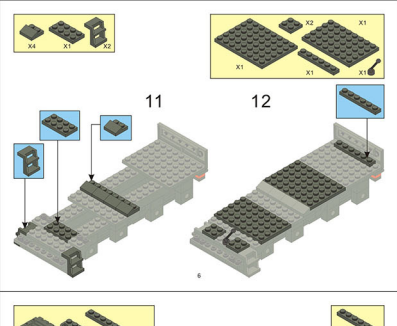

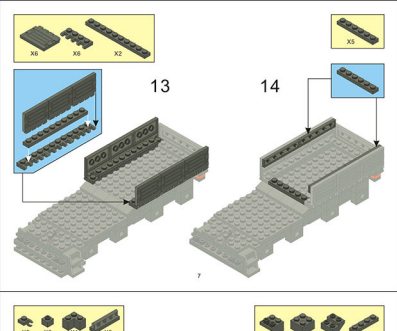

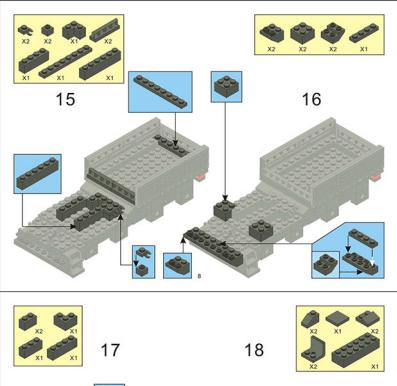

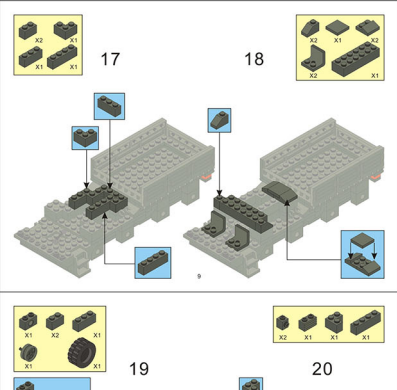

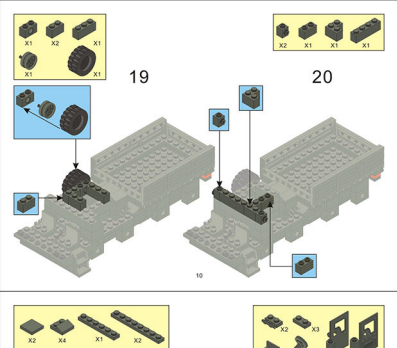

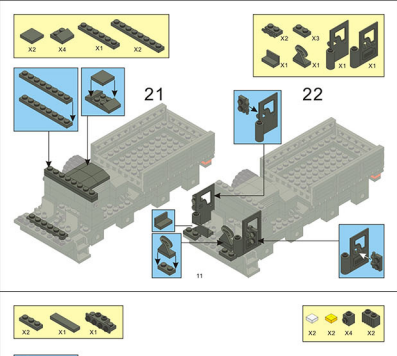

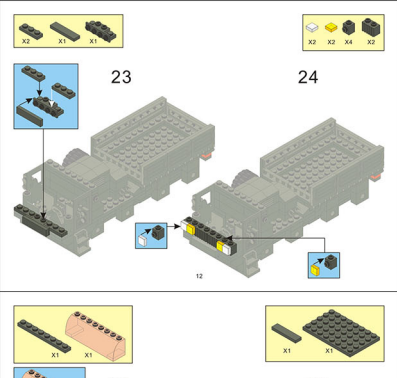

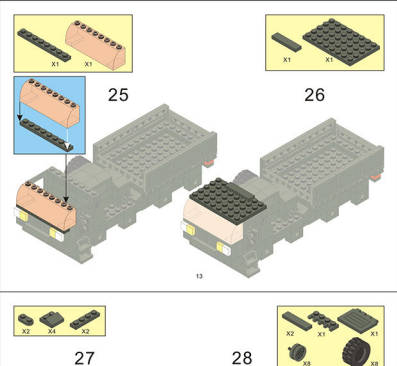

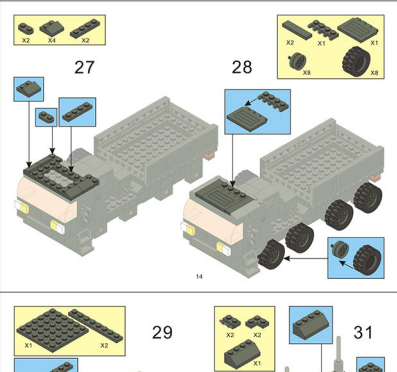

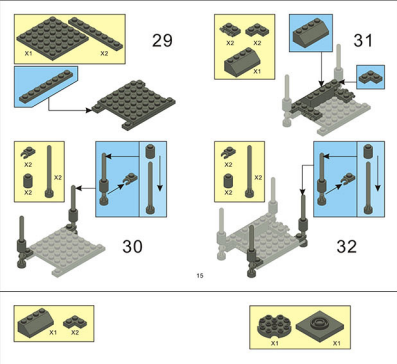

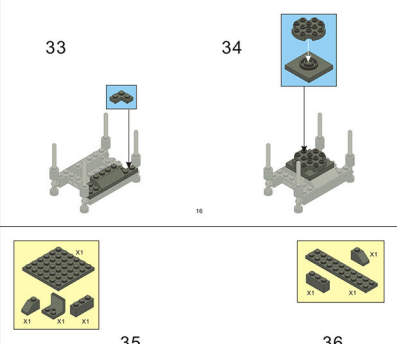

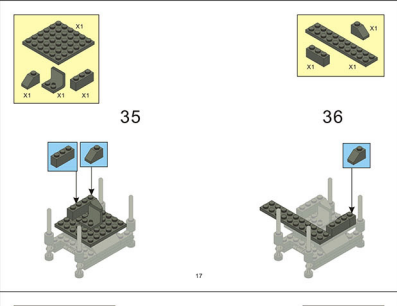

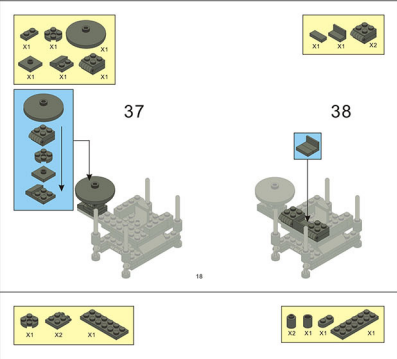

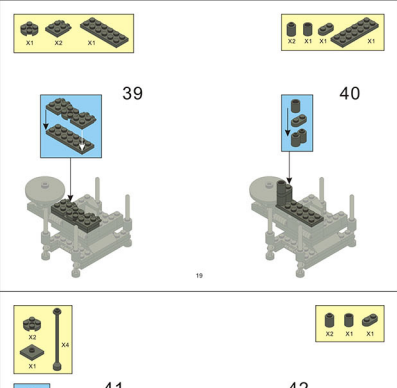

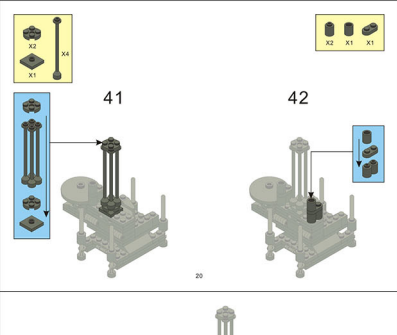

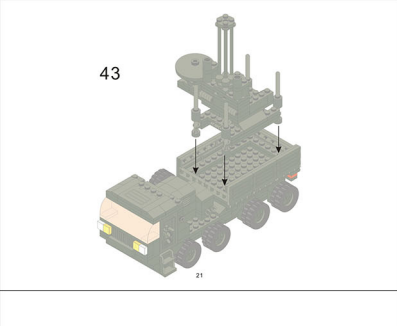

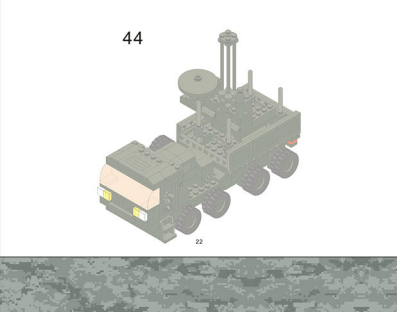

WARNING:
CHOKING HAZARD - Small parts.
Not for children under 3 years.