344 PCS 6+ M38 - B0305

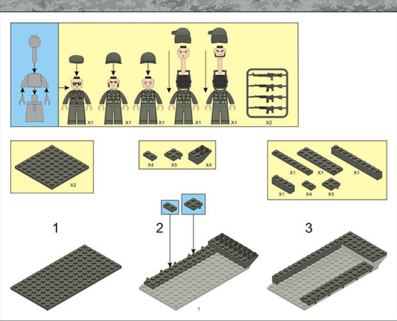

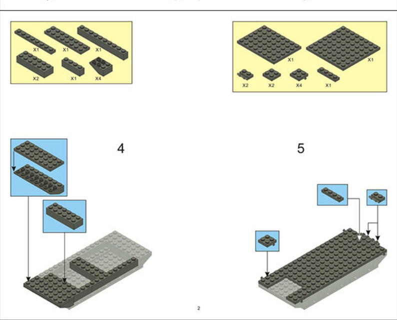

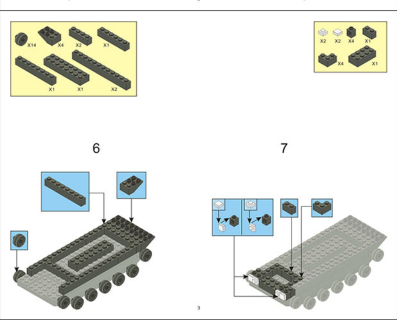

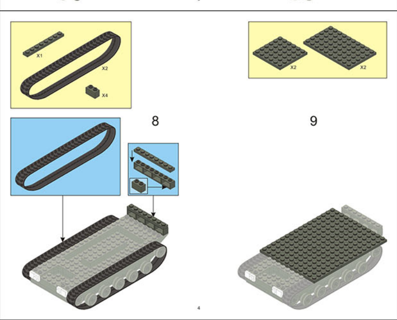

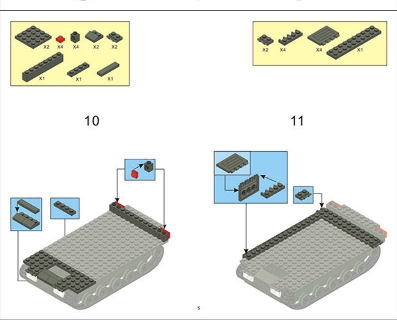

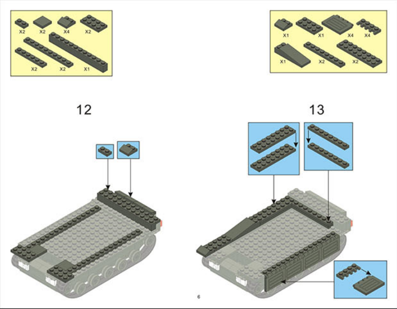

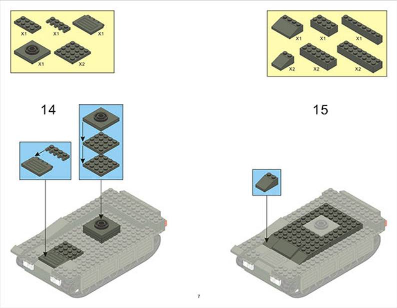

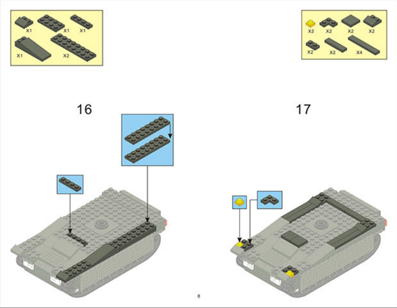

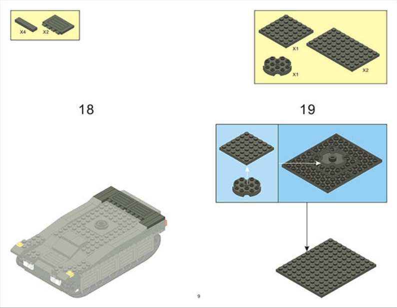

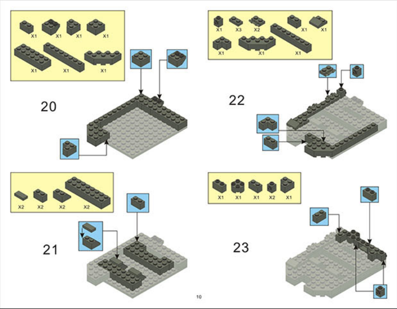

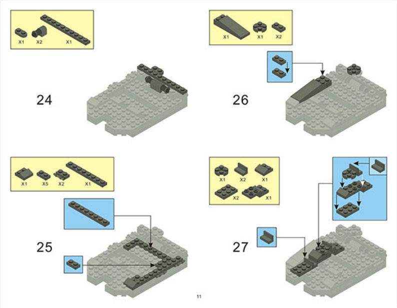

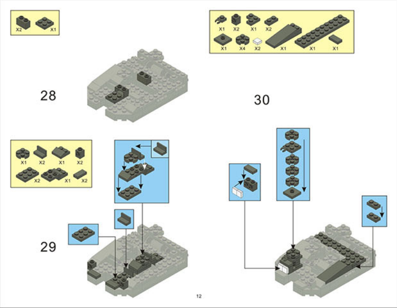

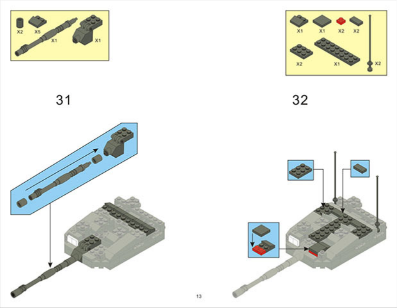

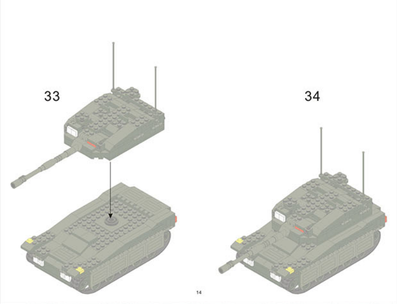

WARNING:
CHOKING HAZARD - Small parts.
Not for children under 3 years.